BOLT™ MISSIONS

MISSION MANUAL

26-27 BOLT Missions: Smart City

SMART·CITY

26 ✦ 27 season

💡 A note about this Mission Manual

This Mission Manual receives ongoing updates (major and minor). Each published version is official and mandatory for all Sphero Robotics Competition Events. New versions immediately supersede the preceding ones.

For any questions related to this Mission Manual, please email support@teamalliance.org.

Version History:

Version 1.0 - May 11, 2026 - initial release

Version 2.0 - July 15, 2026- Major Update

- **Added 26-27 Smart City Season Logo**
- **Changed page numbering to match PDF numbering**
- **Added hyperlinks to TEAM Alliance Student-Powered Policy and Code of Conduct**
- **Added clarification to BOLT-MF1 related to In-Person Mission Field**
- **Changed Mission 3 to Championship Mission**
- **Changed Mission 4 to Mission 3**
- **Championship event timing**
- **Clarified rules M2-4 and M2-7**
- **Rename Remote Submissions with Online Submissions**
- **Added Awards section**
- **Score minimums**
- **Added that Online Submission scores are not shared with a team or displayed publicly under Participation Guidelines**
- **Changed Creativity and attention to detail with Theme Story Points for BOLT–M1-9, BOLT-M2-9, BOLT-M3-10, and BOLT-MC-10**
- **Changed "Thoroughly understands code and strategy to "Implementation Points" for Live and Live Remote Events for BOLT–M1-10, BOLT-M2-10, BOLT-M3-11, and BOLT-MC-11**

Version 2.1 - September 21, 2026 - Minor Update

- **Updated SRM-CR1 - Expanded Student-Powered enforcement**
- **Updated SRM-CR3 - Expanded Code of Conduct requirements**
- **Updated BOLT-RHR2 - Added that Blueprint Engineering and 3D-printed versions of the listed Blueprint pieces are acceptable in competition.**
- **Implementation Scoring - Removed "Online Submission Only" documentation**
- **Theme Story Points - Clarified that Theme Story Points reward "unique, non-functional features" beyond mission requirements**
- **Swapped MC-2 and MC-3: trench construction is now MC-2, 70 points; robot starting positions are now MC-3, 10 points**
- **Corrected scoring total on Championship Mission Objective**
- **Fixed typos**

Version 2.2 - October 14, 2026

- **Added BOLT-MR3, BOLT-MR4, and BOLT-MR5 regarding Mission Objective completion**
- **Updated BOLT-RHR2 for clarification on functional vs. non-functional 3D printing and craft materials**
- **Updated submission directions for BOLT-MR3 and BOLT-MR5**
- **Updated qualifying criteria for Qualifying Online Submission Events**
- **Added "Implementation Points' section for each Mission Objective**

Sphero Robotics Mission Common Rules	
SRM-CR1	Student-Powered™: ***Mission*** solutions are designed, built, coded, and executed by students. If competition work was designed, built, or coded by an adult instead of the Students, the ***Team*** will first be given an opportunity to remove the adult contribution and make corrections using only ***Student*** work. If the ***Team*** can make the necessary corrections, they may continue participating in the Event. If the adult contribution cannot reasonably be removed or corrected, the ***Team*** will not be able to continue competing at that Event. The ***Head Evaluator*** makes the final on-site determination and may work with the ***Event Host*** or ***TEAM Alliance*** when needed.
SRM-CR2	Single Participation: A ***Student*** can only be on one ***Team*** per ***Program*** per ***Season***.
SRM-CR3	TEAM Alliance Code of Conduct: ***Students***, ***Team Coordinators***, volunteers, and spectators are expected to treat others with kindness and respect and follow the ***TEAM Alliance*** Code of Conduct and any additional Event or venue policies. The ***Event Host*** is responsible for addressing conduct or behavior concerns. Serious or continued behavior that does not meet these expectations may result in a ***Student***, adult, or ***Team*** being asked to leave the Event. ***TEAM Alliance*** may be contacted for assistance when needed.
SRM-CR4	Iterative Excellence: Celebrate learning from failure.
SRM-CR5	Creative Autonomy: Teams are encouraged to interpret the ***Mission Objectives*** through the lens of their own unique strategy. The Mission Manual provides the "What" (the objective) and the "Constraints" (the kit limits), but the "How" is entirely up to the ***Students***. The rules in this ***Mission Manual*** are the only rules.
SRM-CR6	3D printing is allowed as long as it follows Student-Powered <SRM-CR1>
SRM-CR7	Autonomous Solutions: Once a robot's program has started, no ***Student*** interaction is permitted with the robot until the ***Mission*** is complete unless a specific rule in a ***Mission Manual*** allows it. An unpermitted ***Student*** interaction voids the results of that ***Mission***.

Safety Rules	
SRM-SR1	Signed Waivers: Any ***Student*** participating in the ***Sphero Robotics Missions*** must have a signed waiver.
SRM-SR2	Adult Supervision: A ***Team Coordinator*** must accompany a ***Team*** at all times.

In-Person Event Rules	
SRM-IPE1	At all ***In-Person Events*** or ***Live Remote Events***, ***Teams*** have timed rounds to attempt a ***Mission Objective*** as many times as desired. Teams must tell the ***Evaluator*** which attempt to record for their ***Individual Mission Score***.
SRM-IPE2	If a ***Team*** has begun their code before the round time is called, the ***Team*** will be allowed to let their code finish.
SRM-IPE3	A ***Team*** may only challenge the results of an ***Individual Mission Score*** before they leave the ***Mission Field*** area.
SRM-IPE4	All rounds of ***Mission Objectives*** remain Student-Powered**.** ***Team Coordinators*** may not provide assistance to a ***Team*** during ***Mission Objectives*****.**

BOLT Mission Rules:	
BOLT-MR1	***Teams*** in ***BOLT Missions*** are classified as ***U12 Student***
BOLT-MR2	There are four (4) ***Mission Objectives*** in the ***BOLT Missions***. Each ***Mission Objective*** is scored according to the respective points outlined in this document
BOLT-MR3	***Teams*** will conduct ***Mission Objectives*** 1 - 3 for ***In-Person*** and ***Online Submission Qualifying Events***.
BOLT-MR4	***Teams*** will conduct ***Mission Objectives*** 1 - 4 for ***In-Person Championship Events***.

BOLT-MR5	Online Submission Finalists will conduct ***Mission Objective*** 4 only for the ***Online Submission Championship Event***.

Robot and Hardware Rules	
BOLT-RHR1	***Teams*** may use either BOLT or BOLT+ robots for the ***BOLT Missions***. The choice of robot may impact a ***Team's*** score based on a robot's capabilities. For the rest of this document, BOLT is a reference to either robot.
BOLT-RHR2	***Teams*** must build the functional portions of all ***Field Objects*** and ***Field Elements*** as specified in the ***Mission Objectives*** using parts from the Blueprint Snap Sphero Robotics Missions Kit. A missing kit part may be replaced with a functionally equivalent 3D-printed part. Additional Blueprint Snap pieces, craft materials, 3D printed parts, and decorative items may be used only for non-functional purposes unless the Mission Objective indicates they can be used for functional purposes. They may not support, strengthen, position, move, guide, trigger, or otherwise affect a ***Field Object***, ***Field Element***, ***Robot*** to contribute to a scoring action. ***Teams*** must verbally confirm compliance during inspection. At an ***Evaluator's*** request, a ***Team*** must demonstrate that an additional item is non-functional or remove it before completing the associated ***Mission Objective***. If an element's purpose is unclear, Evaluators should give the ***Team*** the benefit of the doubt. **A Note About Creativity:** Make your ***Mission Field*** your own! ***Teams*** are encouraged to personalize their ***Mission Field*** with creative, non-functional elements that bring their theme and story to life and help your ***Team*** earn Theme Story points. Have fun and let your creativity shine! Blueprint Snap Sphero Robotics Missions Kit Contents*:* (8) 2x Pitch Truss (12) 3x Pitch Truss (12) 4x Pitch Truss (8) 5x Pitch Truss (6) 10x Pitch Truss (4) Linear Motion Bracket (2) 100 mm Tire

	(2) 90 mm Pulley (2) 45 mm Pulley (2) Spool (40) Connector (20) Cardboard Clamp (4) Turntable (2) Hinge (4) Lock Plate (4) Bearing Plate (4) 1x4 Plate (1) Ring Tool (2) 2x Pitch Capped Shaft (2) 3x Pitch Capped Shaft (2) 4x Pitch Capped Shaft (8) 0.5x Pitch Shaft Collar (2) 1m Rope (2) Rope Anchor
BOLT-RHR3	BOLT and Snap parts must be able to pass ***Inspection*** at ***Events***.
BOLT-RHR4	A ***Team*** must have two (2) BOLTs to fully complete the ***Mission Objectives***.

Mission Field Rules

BOLT-MFR1	The ***Mission Field*** is 1.00 m x 2.00 m divided into 10 cm x 10 cm grid squares. Grids are labeled A-T on the X axis, and 1-10 on the Y axis. ***In-Person Events*** must use the Sphero BOLT+ Code Mat as the ***Mission Field*** for the ***BOLT Missions***. ***Event Hosts*** will supply the ***Mission Fields*** at ***In-Person Events***. ***Live Remote Events*** and ***Online Submissions*** can use any BOLT Code Mat or a homemade ***Mission Field*** with the correct dimensions.
BOLT-MFR2	Except when specified in the ***Mission Manual*** for a specific ***Mission Objective***, Blueprint Snap parts and other elements of decoration may be secured to the ***Mission Field*** using non-permanent adhesive (painter's or masking tape are recommended)

Mission Participation Guidelines

In-Person & Live Remote Events	***In-Person Events*** provide an opportunity for ***Teams*** to work on their ***Mission Objectives*** at home, school, or in their extracurricular club and then showcase their completed ***Mission Objectives*** in an ***In-Person Event*** format. ***Teams*** will be given three (3) minutes to set up for their ***Mission Objective. Teams*** will be given five (5) minutes to attempt their best run of their prepared ***Mission Objective*** for an ***Evaluator.*** This ***Evaluator*** will award an ***Individual Mission Score*** based on the ***Team's*** best attempt during the round and the ***Team's*** ability to thoroughly articulate an understanding of code and strategy with the ***Evaluator*** A ***Team's Total Score*** at a ***Qualifying Event*** can earn them ***Awards*** and qualification to a ***Championship Event.***
Online Submission	***Online Submission*** is where ***Teams*** work on their ***Mission Objectives*** at home, school, or in their extracurricular club and submit them to be evaluated virtually. Each ***Event*** submission will be scored by the ***Sphero Robotics Missions Evaluators*** based on the scoring rubric. See Rules BOLT-MR3 and BOLT-MR5 to review which ***Mission Objectives*** to submit. For each ***Mission Objective, Teams*** must prepare the following deliverables for *an* ***Online Submission*:** ● Submit the following evidence of completion in the Google Slide Submission template (sphero.cc/SRM-bolt-template). ○ VIDEO: Submit a publicly viewable video of the ***Mission Objective***. The video must: i. be submitted in a .mp4, .mov, or .avi format ii. be captured from top down perspective iii. show both BOLTs for the entire ***Mission Objective*** iv. show the timer (if it's a timed ***Mission Objective***) ○ CODE: Submit a screenshot or image of the programs for both BOLT 1 and BOLT 2. ○ DOCUMENTATION: Describe your ***Team's*** process and strategy. **Online Submission Scores:** Individual scores from Online Submission events are not shared with teams or displayed publicly. After all submissions have been reviewed, TEAM Alliance will announce the finalists from each region. These teams will receive an invitation to compete at the Championship Event.

Awards	
In-Person & *Live* Remote Events	The following awards will be given at In-Person and Live Remote SRM Events: **Mission Mastery Awards:** Recognizes the three teams that achieved the highest scores on each individual Mission. These awards are not ranked, and all recipients are recognized equally. ● Mission 1 Mastery Award - 3 Teams ● Mission 2 Mastery Award - 3 Teams ● Mission 3 Mastery Award (Championship Events only) - 3 Teams If a tie would result in more than three teams receiving a Mission Mastery Award, ties are broken using scores from that Mission in the following order: 1. Highest Implementation Points 2. Highest Theme Story Points 3. If a tie still remains, all tied teams will receive the Mission Mastery Award, even if there are more than three recipients. **Overall Event Mission Awards:** Recognizes the top three teams that have achieved the highest ***Total Scores*** at that event. ● Overall Event Champion - Team with the highest ***Total Score*** ● Overall Event 2nd Place Award - Team with the second highest ***Total Score*** ● Overall Event 3rd Place Award - Team with the third highest ***Total Score*** If there is a tie for the Overall Event Mission Awards, then ties will be broken in the following order: 1. Highest Mission 3 Score (Championship Events only) 2. Highest Mission 2 Score 3. Highest Mission 1 Score 4. If there is still a tie, then the teams will have the same rank
Online Submissions	***Championship Events*** The following awards will be given for Online Submission Championship Events: **Overall Event Mission Awards:** Recognizes the top three teams that have achieved the highest ***Championship Mission Scores*** at that event. ● Overall Event Champion - Team with the highest ***Championship Mission Score*** ● Overall Event 2nd Place Award - Team with the second highest ***Championship Mission Score*** ● Overall Event 3rd Place Award - Team with the third highest ***Championship Mission Score***

Championship Event Advancement Criteria	
In-Person & *Live* Remote Events	Teams may receive an invitation to a ***Championship Event*** in one of the following ways: 1. Earn a qualifying award at a ***Qualifying Event***. 2. Receive an invitation from the Global Leaderboard if ***Championship Event*** spots remain available. 3. Receive an invitation from the ***Championship Event*** waitlist if ***Championship Event*** spots still remain available. Depending on ***Championship Event*** capacity and the number of ***Qualifying Events*** within a state or region, one or more of the following awards may qualify teams for a ***Championship Event***: ● Overall Event Champion Award* ● Overall 2nd Place Award ● Overall 3rd Place Award *The Overall Event Champion Award is guaranteed to qualify at ***In-Person Events*** when the ***Qualifying Event*** meets the minimum registered team requirement. Additional awards may qualify to a Championship Event at the discretion of TEAM Alliance. ***Live Remote Events*** that have teams from multiple Championship event regions may only upload results to the Global Leaderboard. Teams are ranked in the Global Leaderboard using their highest ***Total Score*** from a single **Qualifying** or ***Championship Event***. Ties are broken using the following criteria, in order: 1. Highest Mission 4 score from the most recent event 2. Highest Mission 3 score from the most recent event 3. Highest Mission 2 score from the most recent event 4. Highest Mission 1 score from the most recent event 5. If there is still a tie, then the teams will have the same rank **Global Leaderboard Deadline:** Results must be uploaded to the Global Leaderboard by May 17, 2027, to be included in TEAM Alliance and Sphero's 2026–2027 Global Leaderboard recognition. Events held after this date may still upload results, but those scores will not be considered for global recognition. ***Championship Events*** must be posted by May 15th, 2027.
Online Submissions	***Qualifying Online Submission Events*** The top 20 or 25% Teams (whichever is largest) from each region will be Online Submission Finalists and advance to their region's ***Online Submission***

	Championship Event. Ties are broken by: 1. Highest Mission 2 score 2. Highest Mission 1 score 3. If there is still a tie, then the teams will have the same rank Qualifying Online Submissions must be submitted in myTEAMevents.org by March 5, 2027. Online Submission Finalists will be notified on or before March 15, 2027 and must submit their additional Championship Online Submission by April 16th. Regions will be defined by TEAM Alliance for the 2026-2027 season and will be posted in an upcoming manual update.

26-27 BOLT Mission Specific Terms

Turnstile	A **Field Object** required for ***Mission Objective #1.*** A ***Turnstile*** begins the **Mission Objective** in the closed position, and a ***Team*** receives points when ***Turnstile*** is in the open position.
Tunnel	A ***Field Element*** required for ***Mission Objective #1***
Small Building	A ***Field Element*** required for ***Mission Objective #2*** that has a 5 pitch x 5 pitch footprint
Medium Building	A ***Field Element*** required for ***Mission Objective #2*** that has a 10 pitch x 6 pitch footprint
Large Building	A ***Field Element*** required for ***Mission Objective #2*** that has a 10 pitch x 10 pitch footprint
Blueprint Interaction	A ***Field Object*** for **Mission Objective #3** where Blueprint Snap mechanical pieces are placed at the dead end of the **Trench** for BOLT to cause motion (push, pull, spin, knock over, etc.)
Trench	A ***Field Element*** required for ***Mission Objective #3*** - A ***Trench*** must conform to constraints outlined in **BOLT-M3-3**
Autonomous Cargo Vehicle	A ***Field Object*** required for ***Mission Objective #4***
Freight Sled	A ***Field Object*** required for ***Mission Objective #4***
Garage	A ***Field Element*** required for ***Mission Objective #4***

Mission Objective 1: Underground Synchronization

Overview: Beneath the bustling streets of a Smart City lies a complex network of utility tunnels and transit arteries. To keep the city running, autonomous maintenance bots must navigate these narrow passages to inspect infrastructure. In this mission, ***Teams*** must coordinate two BOLT robots as they swap shifts in the city's underground tunnel system.

The challenge is twofold: the robots must first clear the entrance by operating a mechanical ***Turnstile***, and then they must take turns navigating a narrow ***Tunnel*** without making contact. Precision and speed are vital to ensure the underground remains clear for the next shift.

Mission Objective 1 Set Up:

1. Build two ***Turnstiles*** and place them at the intersection of E1-2 & F1-2 and O9-10 & P9-10 in the "closed" position" (pictured).

"Closed":

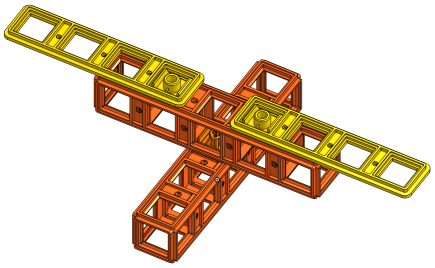

"Open":

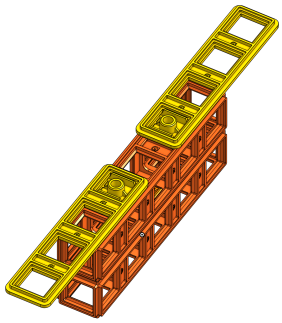

2. Build the ***Tunnel*** and place it in J4 - J7 and K4 - K7.

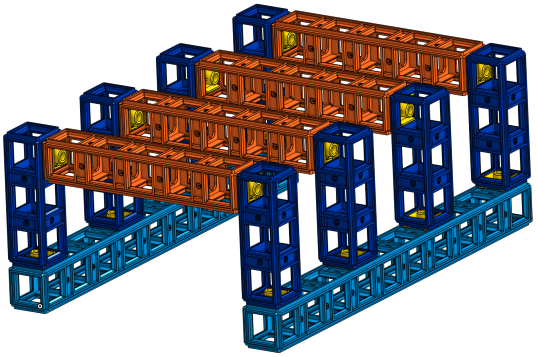

3. Designate the ***Starting Area*** in grid squares A1-C2, and R9-T10.

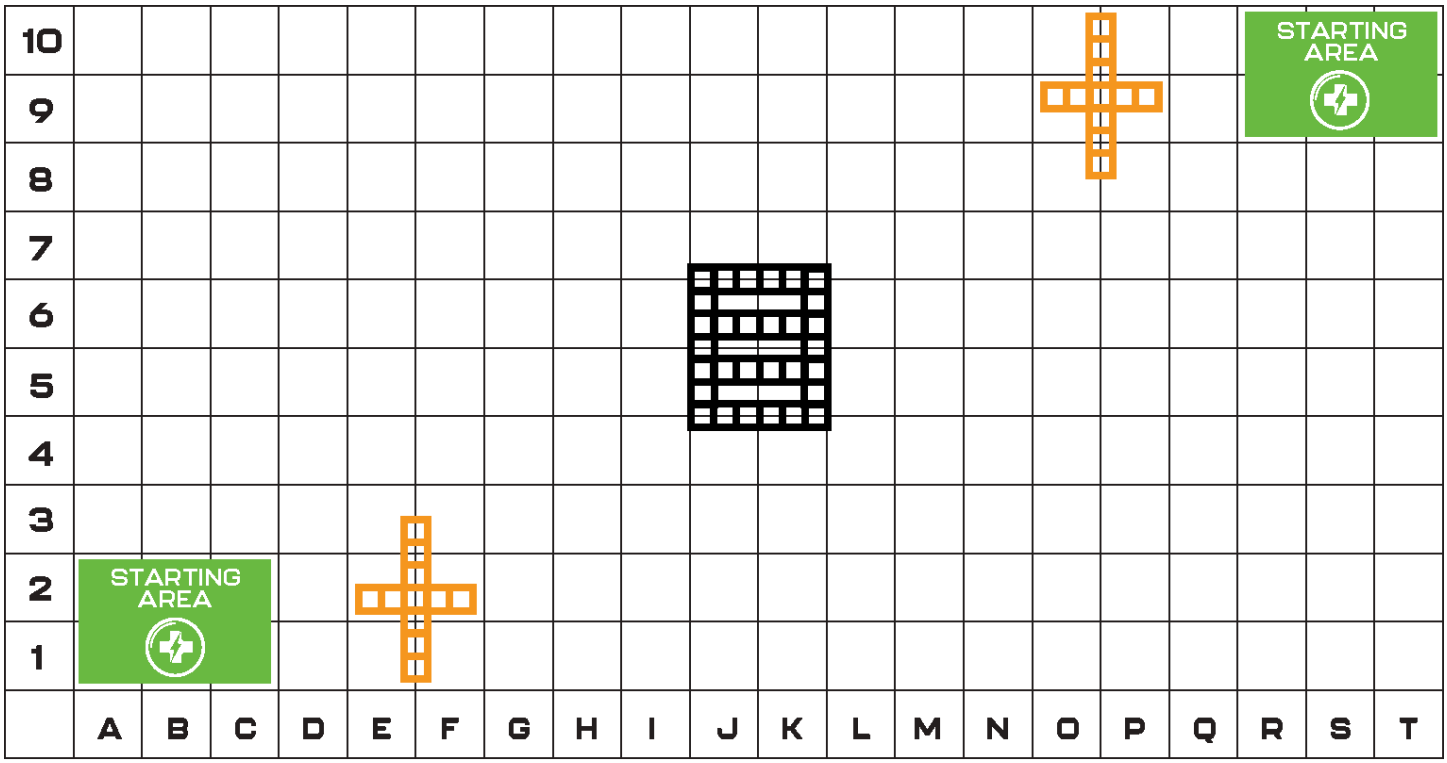

Mission Objective 1 Rules and Scoring:

Rule ID	Objective	Possible Points
BOLT-M1-1	***Mission Field*** is set up correctly to the diagram.	10
BOLT-M1-2	BOLT 1 and BOLT 2 begin in the ***Starting Area.*** (5 points per robot)	10
BOLT-M1-3	Execution of the programs for BOLT 1 and BOLT 2 begin at the same time.	10
BOLT-M1-4	This is a timed ***Mission Objective. Teams*** place a timer, stopwatch, or phone timer on the ***Mission Field***.	10
BOLT-M1-5	BOLT 1 and BOLT 2 roll to a ***Turnstile*** and move it to the open position. (10 points per turnstile)	20
BOLT-M1-6	BOLT 1 and BOLT 2 roll through the ***Tunnel*** at different times in opposite directions. (20 points per robot)	40
BOLT-M1-7	***Teams*** stop the timer once BOLT 1 and BOLT 2 reach the **Ending Area**. The ***Ending Area*** for each BOLT is to finish in the opposite BOLT's ***Starting Area***. For example, BOLT 1 finishes in BOLT 2's ***Starting Area***. (> 30 sec = 20 points, 15 - 30 sec = 40 points, < 15 sec = 60 points)	60
BOLT-M1-8	***Teams*** receive a ***Foul*** if BOLT 1 or BOLT 2 come in contact with each other, if BOLT 1 or BOLT 2 touch the ***Tunnel***, or if they leave the ***Mission Field***. (-5 points each ***Foul***)	
BOLT–M1-9	**"Theme Story Points":** ***Teams*** implement unique, non-functional features beyond the Mission requirements that enhance the theme. **Field Design Features** (custom structures, Blueprint Engineering parts, improved zone designations, or other custom design elements) • None = 0 pts • 1-3 = 5 pts • 4-5 = 7 pts • 6+ = 10 pts **Robot Design Features** (digital audio, and physical changes to the base robot) • None = 0 pts • 1-3 = 5 pts • 4+ = 10 pts	20
BOLT-M1-10	"**Implementation Points":** ***Teams*** demonstrate understanding of the coding concepts and strategic decisions used to complete the Mission Objectives. ***Teams*** must show their code to the Evaluator to receive Coding Feature points.	20

Mission Strategy Features (planning, testing, iteration, trade-offs, time-management, robot positioning, or other strategies to optimize performance)

- None = 0 pts
- 1-3 = 5 pts
- 4-5 = 7 pts
- 6+ = 10 pts

Coding Features (strategic code organization, comments, programming logic (IF/ELSE, loops, variables), custom functions, use of sensors, audio, and displays)

- None = 0 pts
- 1-3 = 5 pts
- 4-5 = 7 pts
- 6+ = 10 pts

Max Points:	**200**

Mission Objective 2: The Morning Rush

Overview: In a thriving Smart City, efficiency is key. As the city grows, the demand for reliable public transportation increases. In this ***Mission Objective***, ***Teams*** will act as transit dispatchers. Your goal is to code two BOLT robots to navigate the city grid, servicing various residential and commercial hubs (***Small***, ***Medium***, and ***Large buildings***) to collect as many passengers as possible.

Success depends on high-speed precision and time management. Can your transit system clear the morning rush before the 45-second clock runs out?

Mission Objective 2 Set Up:

1) Construct the building footprints and place them centered in the designated grid squares:
   - ***Small Building*** = 3 passengers (5 pitch x 5 pitch footprint)
     - i) C5-C6, D5-D6
     - ii) F2-F3, G2-G3
     - iii) J2-J3, K2-K3
     - iv) J8-J9, K8-K9
   - ***Medium Building*** = 5 passengers (10 pitch x 6 pitch footprint)
     - i) C8-C9, D8-D9, E8-E9
     - ii) P8-P9, Q8-Q9, R8-R9
   - ***Large Building*** = 7 passengers (10 pitch x 10 pitch footprint)
     - i) P2-P4, Q2-Q4, R2-R4

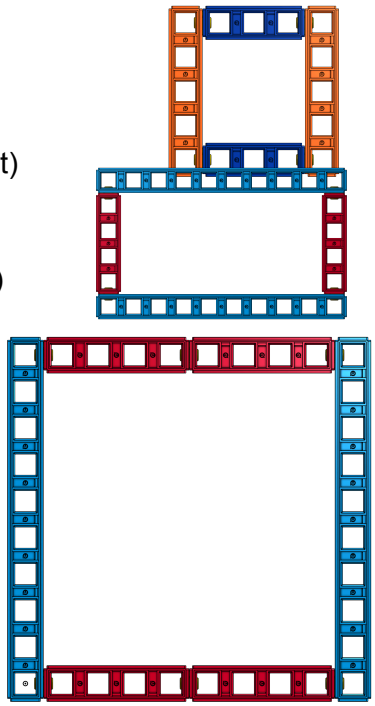

2) Center the ***Buildings*** as much as possible in the center of the designated grid squares. The ***Buildings*** may be attached to the ***Mission Field*** with tape or other materials.
3) Designate the ***Starting Area*** in grid squares F6-F7, G6-G7, and H6-H7.

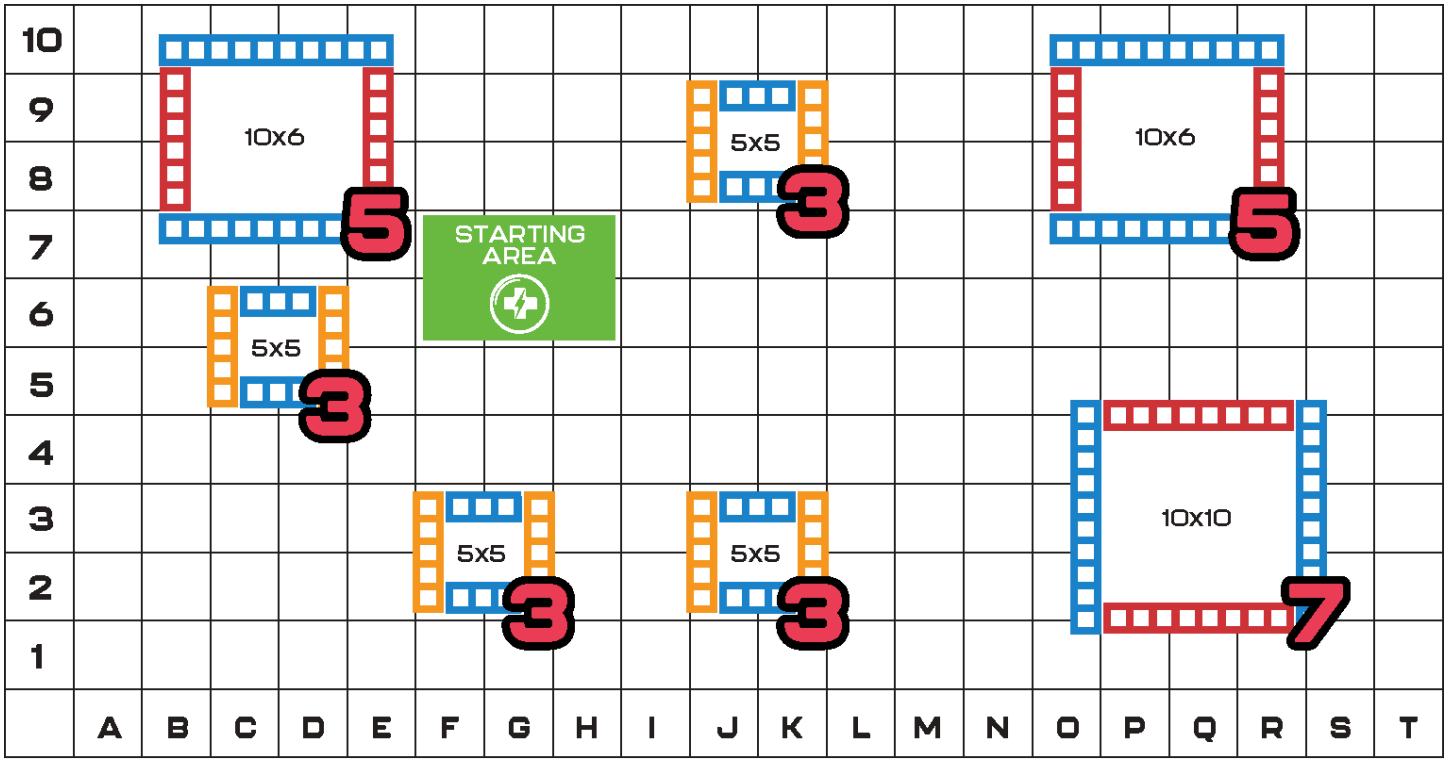
10
9
8
7
6
5
4
3
2
1
A B C D E F G H I J K L M N O P Q R S T
10x6
5
STARTING AREA
5x5
3
10x6
5
5x5
3
5x5
3
5x5
3
10x10
7

Mission Objective 2 Rules and Scoring:

Rule ID	Objective	Possible Points
BOLT-M2-1	***Mission Field*** is set up correctly to the diagram.	10
BOLT-M2-2	BOLT 1 and BOLT 2 begin in the ***Starting Area.*** (5 points each robot)	10
BOLT-M2-3	This is a timed ***Mission Objective***. ***Teams*** place a timer, stopwatch, or phone timer on the ***Mission Field***. ***Teams*** start the timer, then start the BOLT 1 and BOLT 2 programs at the same time.	10
BOLT-M2-4	BOLT 1 and BOLT 2 roll to ***Buildings***, stop in front of a ***Building***, and then drive around the perimeter. (10 points each robot)	20
BOLT-M2-5	BOLT 1 and BOLT 2 show an image or animation on the screen at each ***Building*** during the passenger pickup.	10
BOLT-M2-6	After collecting passengers at buildings, BOLT 1 and BOLT 2 return to the ***Starting Area*** before 45 seconds have elapsed.	20
BOLT-M2-7	Total number of passengers picked up. (5 points per passenger; Max points available is 145 points) For ***Teams*** to receive points for passengers "picked up": ● BOLT comes to a stop at any grid square adjacent to the ***Building***. ● BOLT travels around the ***Building*** returning to the original grid square. ● BOLT comes to a complete stop. ● BOLT has to return to the ***Starting Area*** before 45 seconds has elapsed. ● Once passengers have been picked up at a ***Building***, no more passengers may be picked up from the same ***Building*** by either BOLT. A "Stop" is defined as the robot coming to a complete stop before proceeding to the next command. If a BOLT moves before the full pause is complete, the passengers for that ***Building*** are not counted.	145
BOLT-M2-8	***Teams*** receive a ***Foul*** if BOLT 1 or BOLT 2 touch an ***Obstacle*** or if they leave the ***Mission Field***. (-5 points each ***Foul***)	
BOLT-M2-9	**"Theme Story Points":** ***Teams*** implement unique, non-functional features beyond the Mission requirements that enhance the theme. **Field Design Features** (custom structures, Blueprint Engineering parts, improved zone designations, or other custom design	20

	elements) ● None = 0 pts ● 1-3 = 5 pts ● 4-5 = 7 pts ● 6+ = 10 pts **Robot Design Features** (digital audio, and physical changes to the base robot) ● None = 0 pts ● 1-3 = 5 pts ● 4+ = 10 pts	
BOLT-M2-10	"**Implementation Points": *Teams*** demonstrate understanding of the coding concepts and strategic decisions used to complete the Mission Objectives. ***Teams*** must show their code to the Evaluator to receive Coding Feature points. **Mission Strategy Features** (planning, testing, iteration, trade-offs, time-management, robot positioning, or other strategies to optimize performance) ● None = 0 pts ● 1-3 = 5 pts ● 4-5 = 7 pts ● 6+ = 10 pts **Coding Features** (strategic code organization, comments, programming logic (IF/ELSE, loops, variables), custom functions, use of sensors, audio, and displays) ● None = 0 pts ● 1-3 = 5 pts ● 4-5 = 7 pts ● 6+ = 10 pts	20
	Max Points:	**200**

Mission Objective 3: Cargo Coordination

Overview: As the Smart City grows, the demand for efficient, contactless goods-handling increases. The city's central logistics hub is the heart of this operation, where automated systems manage the flow of heavy cargo and high-priority autonomous deliveries. In this ***Mission Objective***, ***Teams*** must coordinate two BOLT robots to perform precision heavy-lifting and autonomous delivery tasks to keep the city's supply chain moving.

Mission Objective 3 Set Up:

1) Use a Code Mat as the ***Mission Field***. You can also create your own ***Mission Field*** using another method for ***Live Remote Events*** or ***Online Submissions***.
2) Establish the ***Starting Area*** in S6-S7 and T6-T7.
3) Engineer the ***Autonomous Cargo Vehicle*** and place anywhere on the **Mission Field** before Zone 1

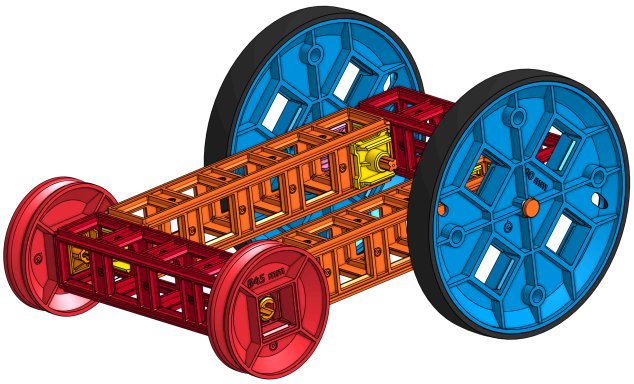

4) Engineer the ***Freight Sled*** and place on the **Mission Field** so the edge of the **Freight Sled** is split between row 8 and 9. The right edge of the **Freight Sled** is in Column P, but not Column Q.

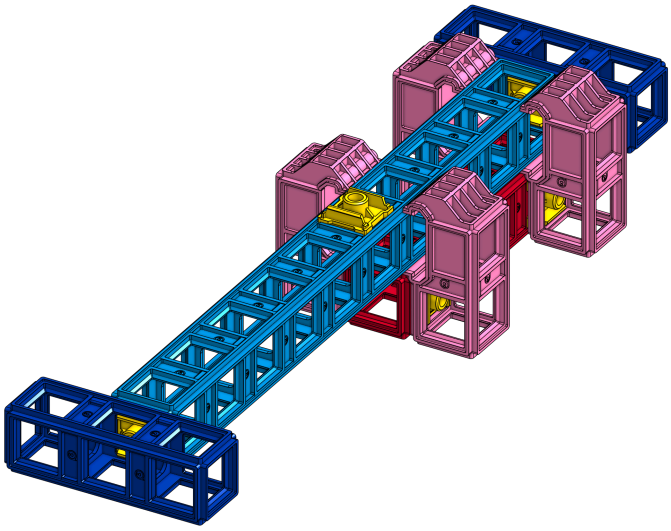

5) Engineer a ***Garage. Garage*** must be placed in grids D7-D9, E7-E9, and F7-F9

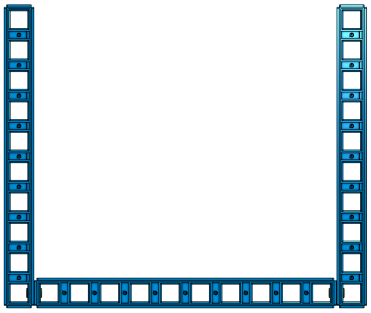

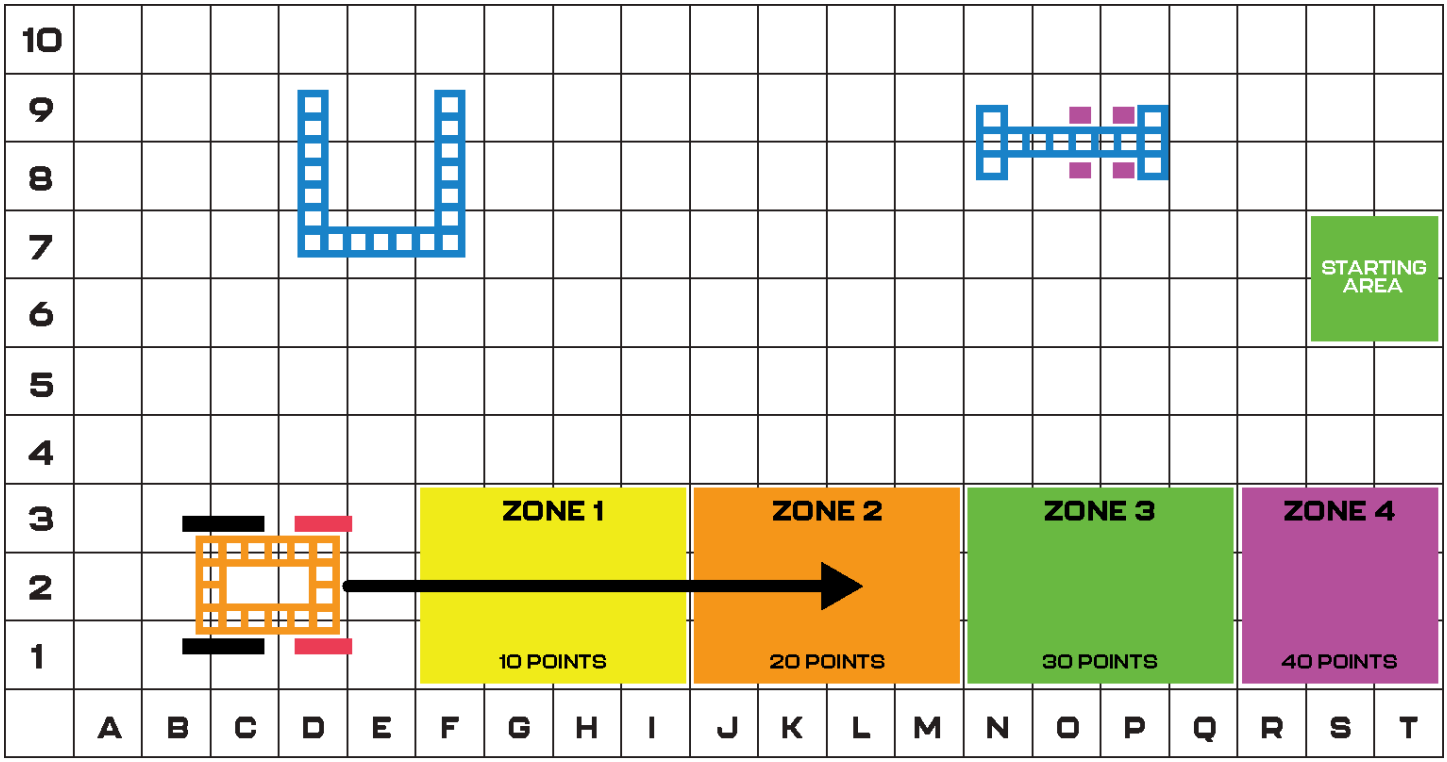
10
9
8
7
6
5
4
3
2
1
A B C D E F G H I J K L M N O P Q R S T
STARTING AREA
ZONE 1
10 POINTS
ZONE 2
20 POINTS
ZONE 3
30 POINTS
ZONE 4
40 POINTS

Mission Objective 3 Rules and Scoring:

Rule ID	Objective	Possible Points
BOLT-M3-1	***Mission Field*** is set up correctly to the diagram. The ***Autonomous Cargo Vehicle***, ***Freight Sled***, and ***Garage*** are built and placed according to specs.	10
BOLT-M3-2	BOLT 1 and BOLT 2 begin in the ***Starting Area.*** (5 points each robot)	10
BOLT-M3-3	BOLT1 and BOLT 2 begin the program at the same time.	10
BOLT-M3-4	BOLT 1 travels to the ***Freight Sled*** and pushes it into column Q so the yellow Snap Connector passes the Linear Motion Brackets .	40
BOLT-M3-5	BOLT 1 codes an animation, image, or text sequence on the LED matrix or screen to indicate the task has been completed.	10
BOLT-M3-6	BOLT 2 travels to the ***Autonomous Cargo Vehicle*** and pushes the **Autonomous Cargo Vehicle** forward.	20
BOLT-M3-7	The ***Autonomous Cargo Vehicle*** stops fully contained in: Zone 1 Columns F-I = 10 points Zone 2 Columns J-M = 20 points Zone 3 Columns N-Q = 30 points Zone 4 Columns R-T = 40 points If the ***Autonomous Cargo Vehicle*** is in two zones, it gets credit for the lower point zone.	40
BOLT-M3-8	BOLT 1 must end in the ***Garage***. **BOLT 2 ends in **Garage** = 10 bonus points*	20
BOLT-M3-9	***Teams*** receive a ***Foul*** if BOLT 1 or BOLT 2 leave the ***Mission Field***. (-5 points each ***Foul***)	
BOLT-M3-10	**"Theme Story Points":** ***Teams*** implement unique, non-functional features beyond the Mission requirements that enhance the theme. **Field Design Features** (custom structures, Blueprint Engineering parts, improved zone designations, or other custom design elements) • None = 0 pts • 1-3 = 5 pts • 4-5 = 7 pts • 6+ = 10 pts	20

	Robot Design Features (digital audio, and physical changes to the base robot) ● None = 0 pts ● 1-3 = 5 pts ● 4+ = 10 pts	
BOLT-M3-11	"**Implementation Points": *Teams*** demonstrate understanding of the coding concepts and strategic decisions used to complete the Mission Objectives. ***Teams*** must show their code to the Evaluator to receive Coding Feature points. **Mission Strategy Features** (planning, testing, iteration, trade-offs, time-management, robot positioning, or other strategies to optimize performance) ● None = 0 pts ● 1-3 = 5 pts ● 4-5 = 7 pts ● 6+ = 10 pts **Coding Features** (strategic code organization, comments, programming logic (IF/ELSE, loops, variables), custom functions, use of sensors, audio, and displays) ● None = 0 pts ● 1-3 = 5 pts ● 4-5 = 7 pts ● 6+ = 10 pts	20
	Max Points:	**200***
	***Max Points with Bonus**	**210**

Mission Objective #4-Championship Mission: City Underground - Trench Inspection

Overview: Deep beneath the Smart City, a complex system of maintenance ducts houses the electrical and water conduits that keep the city running. These trenches are narrow, winding, and hazardous. In this ***Mission Objective***, ***Teams*** must coordinate a high-stakes inspection.

BOLT 2 is a surface operator responsible for managing the high-security entrance and exit hatches of the duct. BOLT 1 is the trench investigator and must navigate the tight, multi-angled trench, locate a specific mechanical fault at a dead end, and successfully interact with the infrastructure to "reset" the system. Success requires a perfect blend of mechanical timing and precision movement to avoid damaging the sensitive trench walls.

Mission Objective 4 Set Up:

1) Use a Code Mat as the ***Mission Field***. You can also create your own ***Mission Field*** using another method for ***Live Remote Events*** or ***Online Submissions***..
2) Establish the ***Starting Area*** in columns A and B
3) Establish the ***Ending Area*** in Columns S and T
4) The remainder of the Mission Field is open to use for the ***Team*** to create a ***Trench*** system.

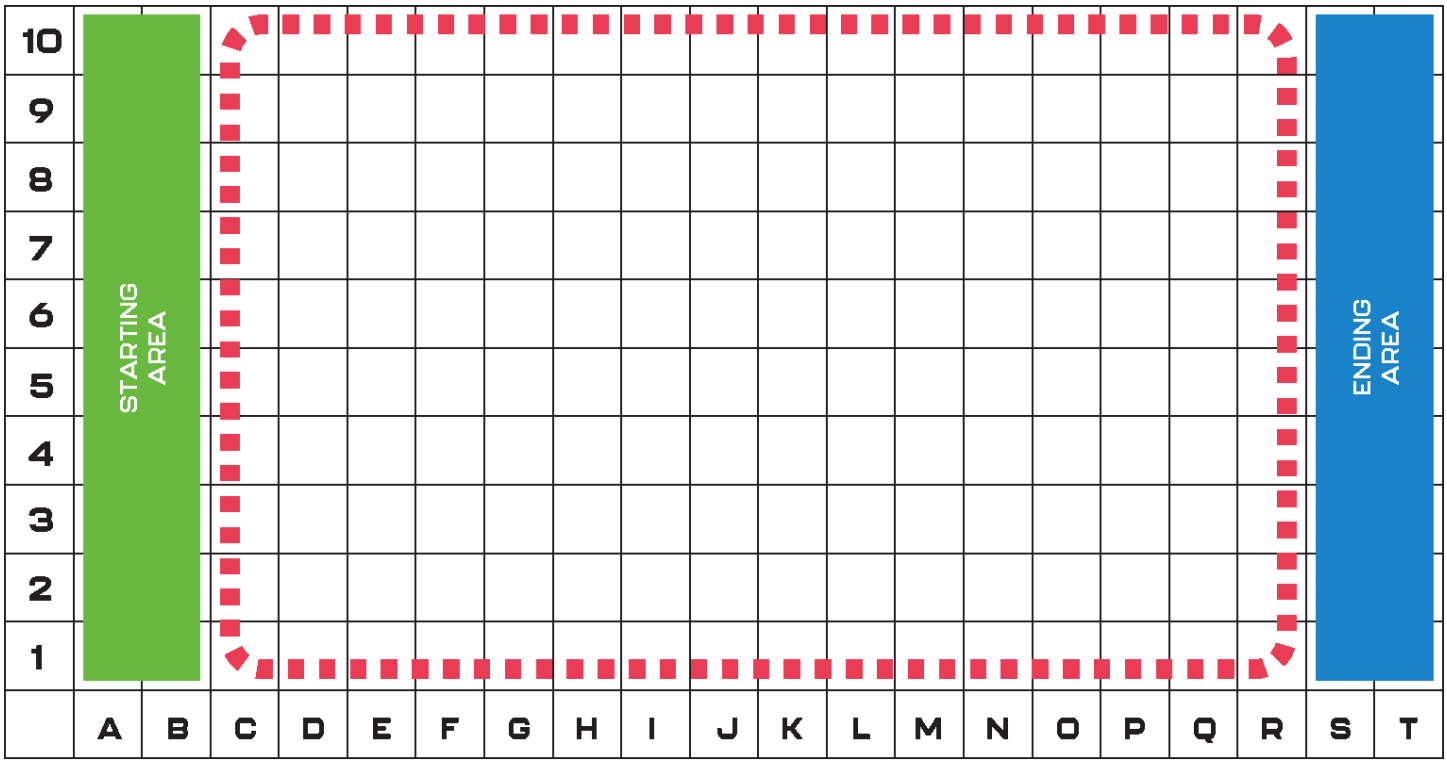

Championship Mission Objective Rules and Scoring:

Rule ID	Objective	Possible Points
BOLT-MC-1	***Mission Field*** is set up correctly to the diagram.	10
BOLT-MC-2	***Teams*** engineer a ***Trench*** with the following constraints: ● ***Trench*** must have an entrance door and exit door built using Blueprint Snap and craft materials - door must be able to be opened and closed. (10 points) ● ***Trench*** can be no wider than 20 cm—8x Blueprint Snap Pitch—wide at any point. (10 points) ● Must have a dead end with a ***Blueprint Interaction.*** (10 points) ● Must include 3 turn angles: ○ One 45° turn (10 points) ○ One 90° turn (10 points) ○ One ***Team*** chosen angle (10 points) ● ***Trench*** walls are at least 5 pitches high. (10 points) ***Trench*** walls must use Blueprint Snap parts as the base, but other craft materials may be used to meet the height requirement.Blueprint Snap pieces do not have have to be connected and craft materials can be used to span gaps between Blueprint Snap trusses	70
BOLT-MC-3	BOLT 1 and BOLT 2 begin in the ***Starting Area.*** (5 points each robot)	10
BOLT-MC-4	BOLT 2 opens the entrance to the ***Trench***. *(20 points)*	20
	*** Bonus Points:* BOLT 2 closes the entrance after BOLT 1 enters the ***Trench***. (10 points)	*10
BOLT-MC-5	BOLT 1enters the ***Trench*** door and navigates through the ***Trench***.	20
BOLT-MC-6	BOLT 1 navigates to a dead end in the ***Trench*** and interacts in some way with a ***Blueprint Interaction*** (knock down, rotate, etc.).	20
BOLT-MC-7	BOLT 2 opens the exit door to the ***Trench***. (20 points)	20
	Bonus Points:* BOLT 2 closes the entrance after BOLT 1 exits the ***Trench. (10 points)	
BOLT-MC-8	BOLT 1 and BOLT 2 end the program in the ***Ending Area***. *(5 points per robot)*	10
BOLT-MC-9	***Teams*** receive a ***Foul*** if BOLT 1 or BOLT 2 leave the ***Mission Field***. (-5 points each ***Foul***)	

BOLT-MC-10	**"Theme Story Points": *Teams*** implement unique, non-functional features beyond the Mission requirements that enhance the theme. **Field Design Features** (custom structures, Blueprint Engineering parts, improved zone designations, or other custom design elements) ● None = 0 pts ● 1-3 = 5 pts ● 4-5 = 7 pts ● 6+ = 10 pts **Robot Design Features** (digital audio, and physical changes to the base robot) ● None = 0 pts ● 1-3 = 5 pts ● 4+ = 10 pts	20
BOLT-MC-11	"**Implementation Points": *Teams*** demonstrate understanding of the coding concepts and strategic decisions used to complete the Mission Objectives. ***Teams*** must show their code to the Evaluator to receive Coding Feature points. **Mission Strategy Features** (planning, testing, iteration, trade-offs, time-management, robot positioning, or other strategies to optimize performance) ● None = 0 pts ● 1-3 = 5 pts ● 4-5 = 7 pts ● 6+ = 10 pts **Coding Features** (strategic code organization, comments, programming logic (IF/ELSE, loops, variables), custom functions, use of sensors, audio, and displays) ● None = 0 pts ● 1-3 = 5 pts ● 4-5 = 7 pts ● 6+ = 10 pts	20
	Max Points:	**220***
	***Max Points with Bonus**	**240**

Glossary:

Program	***Sphero Robotics Missions*** comprises three unique ***Programs***: • ***indi Missions*** • ***BOLT Missions*** • ***RVR Missions***
Student	Anyone born after May 1, 2007
Team	A group of ***Students***
U9 Student	Any ***Student*** born on or after Sept 1, 2017 meaning they will be 8 or younger on Aug 31, 2026
U12 Student	Any ***Student*** born on or after Sept 1, 2014 meaning they will be 11 or younger on Aug 31, 2026
U15 Student	Any ***Student*** born on or after Sept 1, 2011 meaning they will be 14 or younger on Aug 31, 2026
indi Missions	***Teams*** competing in this ***Program*** must consist of only ***U9 Students*** and at least one ***Team Coordinator***
BOLT Missions	***Teams*** competing in this ***Program*** must consist of only ***U12 Students*** and at least one ***Team Coordinator***
RVR Missions	***Teams*** competing in this ***Program*** may consist o*f only* ***U15 Students***, and at least one ***Team Coordinator***
Team Coordinator	An adult in a supervisory role for the ***Students*** that will handle the registration, submission, and management of ***Team*** meetings. ***Teams*** may have more than one ***Team Coordinator***.
Mission Objectives	Each ***Program*** is broken up into ***Mission Objectives*** that ***Teams*** will be evaluated on based on guidelines in this document
Mission Field	A defined space for each ***Program***. Reference individual ***Mission Manual*** for specific ***Mission Field*** guidelines

Individual Mission Score	A ***Team's*** score for an individual ***Mission Objective*** recorded by an ***Evaluator***
Total Score	The total combined score of all ***Individual Mission Scores*** for a ***Team***
Starting Area	The area of the ***Mission Field*** where robots begin a ***Mission Objective***
Ending Area	When required, the area of the ***Mission Field*** where robots finish their program
Manual Drive Mode	A driver controlled portion of a ***Mission Objective*** instead of programmed commands
Foul	Points deducted in some ***Mission Objectives*** if a team commits a ***Foul*** as outlined in the ***Mission Manual***. Unless stated otherwise, there is no limit on the number of ***Fouls*** a Team can receive in a ***Mission Objective***. The ***Team's Mission Total Score*** cannot go below 0 points due to **Fouls**.
Obstacles	Defined as any object placed in the ***Mission Field*** as part of the setup for a ***Mission Objective*** that should be avoided as outlined in the ***Mission Manual***. If a robot drives into an ***Obstacle***, they will receive a ***Foul***.
Field Element	An element added to the ***Mission Field*** as specified in the ***Season*** rules
Field Object	A scored object added to the ***Mission Field*** as specified in the ***Season*** rules
Season	The approved timeline for participation in the ***Sphero Robotics Missions***. A standard ***Season*** runs from June 2026 through May 2027.
Event Host	Approved adult coordinator and primary contact to organize, plan, and implement successful Sphero Robotics Mission ***Events*** with the help of TEAM Alliance
Evaluator	A volunteer responsible for evaluating a ***Team's*** mission attempts during an ***Event***
OnlineSubmission	***Teams*** submit pre-recorded ***Mission Objectives*** to an ***Event Host*** for evaluation. This is an option for ***Online Submission Season*** registrations.
In-Person Event	Events that are included as an option with in-person ***Season*** registrations. These events allow a ***Team*** to run ***Mission Objectives*** at a location with other ***Teams*** and an in-person ***Evaluator***.
Prequalifying Event	An early ***Season In-Person Event*** that doesn't qualify for a ***Championship Event*** (or any other ***Event***). An in-person ***Team*** registration does not include entry into a **Prequalifying Event.**
Qualifying Event	A ***Season In-Person Event*** that qualifies a ***Team*** for ***Championship Events***. An in-person ***Team*** registration includes entry into one **Qualifying Event.**
Live Remote Event	***Events*** that are included as an option with in-person ***Season*** registrations. These

	events allow a ***Team*** to run ***Mission Objectives*** remotely with other ***Teams*** and a remote ***Evaluator***.
Championship Event	A state, regional, or national event that serves as the culminating competition for ***Teams*** that qualify through designated ***Qualifying Events***. In the U.S., ***Championship Events*** are typically state-level, but may include multiple ***Championship Events*** within a single state or combining multiple states into a regional ***Championship Event.*** Internationally, regional or national ***Championship Events*** are used where geographic considerations apply.